IMPORTANT NOTICE - READ CAREFULLY

# Meter Setter Installation Instructions

## Copper Meter Setters and Resetters

A. Prior to installation, verify setter dimensions are suitable for meter threads and laying length.

B. Two gaskets are furnished with each meter setter for the new meter connections.

C. DO NOT use Vaseline®, plumber's grease, or any other petroleum based product on seals or o-rings.

D. For ease of installation, the top spacing for the new meter connection is designed to have clearance for the meter and two gaskets. Hand tighten BOTH meter nuts SIMULTANEOUSLY. Then, alternating between meter nuts, wrench tighten to assure a positive seal. Excess tightening may damage the gasket and cause leakage.

E. Meter setters having DOUBLE PURPOSE end connections are designed for either threaded pipe or flared tubing. A rubber gasket is normally furnished and installed in all A.Y. McDONALD DOUBLE PURPOSE end connections. This gasket is provided to ease assembly when using the threaded pipe configuration. If gasket is not used, then nut must be tightened to a minimum torque of 30 ft/lbs. Discard the gasket when using flared tubing.

F. Meter setters having compression ends are furnished with appropriate compression connection nuts and gaskets.

G. RESETTER end connection threads are straight meter threads and are not to be used with standard tapered threads.

H. Gaskets are required between the meter RESETTER and the meter valve or coupling.

I. RESETTERS have the same laying length as the meter they are replacing.

J. If a pipe nipple is to be used as an idler bar, it is recommended that a schedule 80 pipe nipple be selected and that care is exercised in tightening the swivel nut. Excess tightening may damage the gasket and cause leakage. If the gasket is damaged, replace before re-assembly.K. PVC idler bars that come installed in setters are for shipping purposes ONLY. These PVC pipe nipples should NOT be used in a pressurized system.

K. PVC idler bars that come installed in setters are for shipping purposes ONLY. These PVC pipe nipples should NOT be used in a pressurized system.

## Ball Valves

1. Keep valve clean and free from dirt and debris.
2. Protect valve from freezing, which may distort ball. In the event the valve does freeze, do not forcibly try to open or close the valve while the valve is frozen. This may destroy the valve.
3. Use a snug fitting smooth jaw wrench on the wrenching flat nearest the tightened end. Do not wrench the body/endpiece joint.
4. Insert stiffeners must be used with all plastic tubing except PVC.
5. Always use an approved sealant or teflon tape on tapered pipe threads.
6. If valve has compression style connection, read connection instructions on reverse side prior to installation.
7. If the valve cap or stop box handle is perpendicular to the water line, the valve is closed. If the valve cap or stop box handle is inline with the water line, the valve is open. For standard valves with turning restraints (checks), turn the cap counter-clockwise to open and clockwise to close (unless ordered otherwise). Valves without turning restraints (checks) may be turned either direction to open or close.
8. Ball valves generally require low operating torques. If valve turns hard, check turning direction before applying excess force. Excess force can damage or destroy the turning restraints (checks) in the ball valve cap and body assembly.
9. All valves must be operated in the fully opened or fully closed position. Attempts to throttle flow by operating the valve in a partially open position may destroy the valve. If valve is used as a blowoff valve, contact the factory for proper procedure.
10. **PRESSURE TEST FOR LEAKS BEFORE BACKFILLING.**
11. **USE ONLY ON COLD WATER SERVICES.**

## Angle Single Check Backflow Preventers/Device

### 702 Series - Model Number Explanation

**SPACE 1, 2, & 3**
**Basic Single Check Valve Model Number:**
702 = Angle valve

**SPACE 4**
(-) Standard
W = Pentagon test plug in cap

**SPACE 5**
**Single Check Valve Size:**
3 = 3/4", 4 = 1"

**SPACE 6**
**Inlet Connection Type:**
H - Meter Swivel Integral w/Saddle
J - Meter Swivel Integral
Y - Yoke style thread male integral

**SPACE 7**
**Outlet Connection Type:**
E - Female iron pipe integral

**SPACE 8**
Blank

**SPACE 9**
**Thread Size of Meter Swivel Nut**

| METER SIZE | THREAD SIZE | METER DESIGNATION |
|---|---|---|
| 5/8" | 3/4" | 3 |
| 5/8" X 3/4" | 1" | 4 |
| 3/4" | 1" | 4 |
| 1" | 1 1/4" | 5 |

For Iron Yokes use the following designation

| METER SIZE | THREAD SIZE | METER DESIGNATION |
|---|---|---|
| 5/8" | - | 2 |
| 5/8" X 3/4" | - | 3 |
| 3/4" | - | 3 |
| 1" | -" | 4 |

**SPACE 10**
**Sizes for Outlet Connections:**
3/4" = 3, 1" = 4

### COMPONENTS & REPAIR PARTS

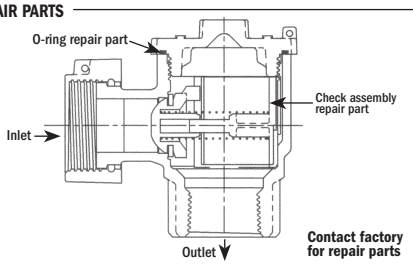


### Single & Dual Check Installation Instructions

1. Use only for residential and mobile home supply service or individual outlets.
2. The device can be installed in any position.
3. The device shall be installed in an accessible location to facilitate the removal for servicing and testing.
4. Service lines should be thoroughly flushed before installing the device. Excessive pipe sealant or Teflon tape may foul check. A suitable strainer should be installed upstream of the device.
5. DO NOT use Vaseline®, plumber's grease, or any other petroleum based product on seals or O-rings.
6. Insure that device is installed in proper flow direction. Refer to flow direction arrow on body.
7. Do not over-tighten O-ring cap seal or across body cylinder to avoid distortion.
8. Any sweat fittings must be completed before installing device.
9. A pressure relief valve or expansion tank is recommended downstream of device if thermal expansion conditions are possible.
10. Use only on cold water services. Protect from freezing.
11. This device is not recommended for pressures exceeding 175 PSI.

## CAUTIONS

**A.Y. McDonald waterworks products are designed for reliable service. Like all brass products, however, they can be damaged by improper handling and use.**

1. Protect threads. Avoid loose fitting wrenches. Do not drop or impact.
2. Use extra care with high water pressures (over 100 PSIG) and pipe or tubing over 1". Consult factory if desired.
3. Inspect and test all joints, valves and fittings before backfilling.
4. Backfill carefully so as to avoid damage to the service line and connections. Looping of the service lines is recommended to minimize strain.
5. DO NOT use Vaseline®, plumber's grease, or any other petroleum based product on seals or o-rings.
6. DO NOT pressurize system with factory installed PVC idler in place.

**Damage caused by improper use and/or handling will void our warranty.**

## Angle Dual Check Backflow Preventers/Device

Meets requirements of ASSE 1024 and CSA B64.6

### 712 Series - Model Number Explanation

**SPACE 1, 2, & 3**
**Basic dual check valve model number:**
712 = Angle valve

**SPACE 4**
(–) Standard
W=Pentagon test plug in cap

**SPACE 5**
**Dual check valve size:**
3 = 3/4" 4 = 1"

**SPACE 6**
**Inlet connection type:**
H - Meter swivel integral with saddle
J - Meter swivel integral
Y - Yoke style thread male integral

**SPACE 7**
**Outlet connection type:**
E = Female iron pipe integral
Q = CTS Q - Series compression integral
R = Copper flare integral
T = CTS T - Series compression integral
2 = CTS (-22) Mac-Pak compression integral

**SPACE 8**
**Blank**

### COMPONENTS & REPAIR PARTS

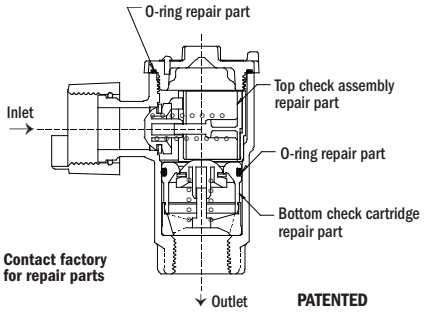


**SPACE 9**
**Thread size of meter swivel nut**

| METER SIZE | THREAD SIZE | METER DESIGNATION |
|---|---|---|
| 5/8 | 3/4" | 3 |
| 5/8 x 3/4 | 1" | 4 |
| 3/4 | 1" | 4 |
| 1 | 1 1/4" | 5 |

For Iron Yokes use the following designation.

| METER SIZE | THREAD SIZE | METER DESIGNATION |
|---|---|---|
| 5/8 | - | 2 |
| 5/8 x 3/4 | - | 3 |
| 3/4 | - | 3 |
| 1 | - | 4 |

**SPACE 10**
**Sizes for outlet connections**
3/4"=3 1"=4

### Field Inspection & Test Procedure

**A. DIS-ASSEMBLY**
1. Remove the device cap.
2. Remove the two check assemblies using care not to damage device components.
3. Visually inspect seals, sealing surfaces, etc. for debris or damage.

**B. TESTING**
1. Insert top check assembly into A.Y. McDONALD angle test kit as shown in drawing.
2. Add water to test kit level to upper red line - 42 inches (1.5 psig).
3. Observe water level for up to 5 minutes until water level stabilizes. Water level should not fall below lower red line - 28 inches (1.0 psig).
4. If water column falls below 28 inches the check assembly should be cleaned and re-tested or replaced.
5. Repeat steps B1 - B4 for bottom check cartridge.

**C. RE-ASSEMBLY**
1. Clean and inspect device components.
2. Bottom Check cartridge O-ring should be lightly lubricated with a NSF approved silicone lubricant.
3. Insert check assemblies into body correctly corresponding to flow direction on the device body.
4. Re-assemble device cap. Do not over-tighten.

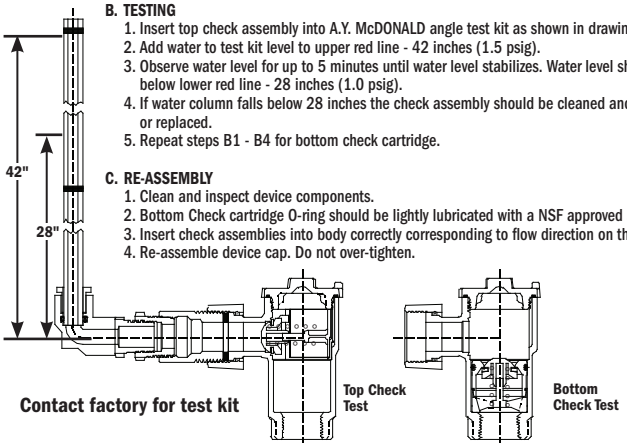

IMPORTANT NOTICE - READ CAREFULLY

# Meter Setter Installation Instructions

## Compression Connectors - General Information

1. Use a tube or pipe cutter to assure a square end. Make sure pipe is round. On copper tubing, use a rounding tool, if necessary. Surface should be clean.
2. Service tubing should always be **snaked** in the ditch.
3. ***INSERT STIFFENERS MUST BE USED ON FLEXIBLE PLASTIC SERVICE TUBE OR PIPE.**
4. Stab tube or pipe through the nut and into the socket of the valve or fitting until it bottoms out (some fittings may not have a stop).
5. If the nut or socket appears too large or small, a check should be made to be sure you are using the correct fitting and pipe/tube.
6. **PRESSURE TEST FOR LEAKS BEFORE BACKFILLING.**
7. **USE ONLY ON COLD WATER SERVICES.**

## Steel Pipe Size "-55" Compression Connectors

Tighten the "-55" Compression nut onto the valve or fitting to the following minimum torques.

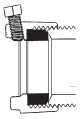

3/4" size..... 30 ft-lbs.
1" size..... 35 ft-lbs.
1 1/2" size..... 40 ft-lbs.
2" size..... 45 ft-lbs.

This compresses the gasket for watertight connections. Overtorquing nut by 10-20 ft-lbs. will not affect connections.

Lock the pipe onto the nut by tightening the cup-point set screw(s) as follows (NOTE UNIT CHANGE):

3/4" size ..... 3/4 - 1 turns (approx. 50 in-lbs.)
1" size.....1 1/2 - 2 turns (approx. 180 in-lbs.)
1 1/2" size.. 1 1/2 - 1 3/4 turns (approx. 210 in-lbs.)
2" size..... 1 1/2 - 1 3/4 turns (approx. 210 in-lbs.)

## Mac-Pak Compression Connectors (-22, -33, -44)

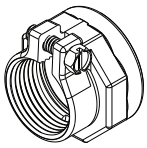

Tighten the Mac-Pak nut onto the valve or fitting to the following minimum torques. Overtorquing nut by 10-20 ft.-lbs. will not affect connections.

1/2" size..... 20 ft.-lbs.
3/4" size..... 25 ft.-lbs.
1" size..... 30 ft.-lbs.
1 1/4" size..... 35 ft.-lbs.
1 1/2" size..... 40 ft.-lbs.
2" size..... 45 ft.-lbs.

Lock the tube or pipe into the nut by securely tightening the split clamp side screw (use a box end or socket wrench, not a screwdriver). The torques to which the clamp side screw should be tightened are as follows (NOTE CHANGE IN UNITS).

1/2" size.....70-80 in.-lbs.
3/4" size.....80-90 in.-lbs.
1" size.....90-100 in.-lbs.
1 1/4" size.....120-140in.-lbs.
1 1/2" size.....160-180 in.-lbs.
2" size.....200-220 in.-lbs.

### A.Y. McDonald Mac-Pak Coding System

All A.Y. McDonald Mac-Pak fittings are coded to identify which type of service material they are designed to fit. Lettering is on the hex of the Mac-Pak nut.

***INSERT STIFFENERS MUST BE USED ON FLEXIBLE PLASTIC SERVICE TUBE OR PIPE.**

### CTS
- Copper tube (Type K or L)
- PE tube per ASTM D2737 SDR 9 ONLY
- PB tube per ASTM D2666 SDR 9 Class 250 ONLY

### PVC
- PVC pipe per ASTM D1785
- Steel pipe
- Brass pipe

### *PEP
- PE pipe per ASTM D2239 SIDR 7 ONLY
- PB pipe per ASTM D2662 SIDR 7 Class 250 ONLY
  * was marked IPS until 2/02

## CTS McQuik ("Q") Series and PEP McQuik ("-3Q") Series Compression Connectors

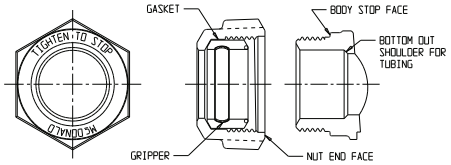


Tighten the CTS McQuik "Q" Series nut or the PEP McQuik "-3Q" nut to the stop. The end face of the nut is to contact the stop face of the body.

### T - Series (CTS) Compression Connectors

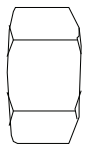

Tighten the compression nut onto the valve or fitting to the following minimum torques. Overtorquing nut by 5-10 ft.-lbs. will not affect connections.

**T - Series**

3/4" size..... 50 ft.-lbs.
1" size..... 55 ft.-lbs.
1 1/4" size..... 65 ft.-lbs.
1 1/2" size..... 100 ft.-lbs.
2" size..... 125 ft.-lbs.

**Types of Pipe/Tubing for use with A.Y. McDonald Fittings** (Outside Diameters listed)

| NOMINAL SIZE | TYPE K or L COPPER TUBE | POLYETHYLENE ASTM D2737 SDR 9 TUBE SIZE ✻ | POLYBUTYLENE ASTM D2666 SDR 9 TUBE SIZE CLASS 250 ✻ | POLYETHYLENE ASTM D2239 SIDR 7 PIPE SIZE ✻ | POLYBUTYLENE ASTM D2662 SIDR 7 CLASS 250 ✻ |
|---|---|---|---|---|---|
| 3/4" | .872 / .878 | .871 / .879 | .875 / .883 | 1.045 / 1.110 (1.089) | 1.045 / 1.110 (1.089) |
| 1" | 1.121 / 1.129 | 1.120 / 1.130 | 1.125 / 1.135 | 1.329 / 1.399 (1.384) | 1.329 / 1.399 (1.384) |
| 1 1/4" | 1.371 / 1.379 | 1.370 / 1.380 | 1.375 / 1.385 | 1.754 / 1.832 (1.804) | 1.754 / 1.832 (1.804) |
| 1 1/2" | 1.621 / 1.630 | 1.619 / 1.631 | 1.625 / 1.637 | 2.050 / 2.141 (2.109) | 2.050 / 2.141 (2.109) |
| 2" | 2.120 / 2.130 | 2.119 / 2.131 | 2.125 / 2.137 | 2.637 / 2.742 (2.709) | 2.637 / 2.742 (2.709) |

**✻ INSERT STIFFENERS MUST BE USED ON FLEXIBLE PLASTIC SERVICE TUBE OR PIPE.**

( ) · Maximum pipe O.D. that will work with A.Y. McDonald fittings.

## Kitec® Fitting Installation Instructions

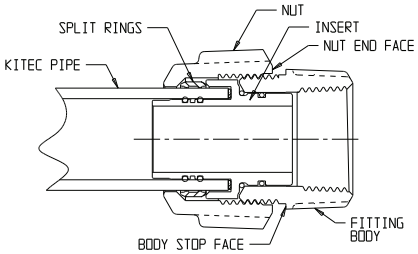


1. Inspect Kitec® pipe for defects. Do not use pipe with punctures or tears in the PE layers.
2. Make a square cut of the Kitec® pipe using the recommended cutter. Make certain the stainless steel cutting blade is sharp and in good condition prior to cutting the tube.
3. Insert recommended rounding tool into Kitec® pipe to restore the roundness of the pipe that is often lost when the pipe is cut.
4. Remove the nut and split ring from the fitting and push them onto the pipe.
5. Bevel the inside of the Kitec® pipe by inserting a recommended reaming tool and rotating it 360° to engage the blades. This will allow the insert to slip more easily into the pipe without displacing or damaging the O-rings.
6. Make sure insert is fully inserted in the fitting body. Now push the insert completely into the pipe. If required, rotate the fitting to place it in the proper orientation at this time.
7. Bring the split ring and nut against the fitting and thread until the nut reaches the stop. The end face of the nut is to contact the stop face of the body.
8. If it is necessary to remove the fitting, release the nut, remove the split ring and pull the fitting off the pipe. Inspect the tubing to make certain the PE is not punctured. Before reassembling the joint, inspect the split ring for sharp edges and the O-rings for cuts. Replace if necessary.
9. Do not bend pipe to a radius tighter than 5 times its nominal diameter. If the bending radius is near 5 times the diameter of the pipe, a bending tool should be used.
10. **USE ONLY WITH KITEC® PIPE PER ASTM F 1281 OR ASTM F 1282.**
11. **USE ONLY ON COLD WATER APPLICATIONS.**

**WARNING:** It is unlawful in **CALIFORNIA & VERMONT (effective 1/1/2010); MARYLAND (effective 1/1/2012); LOUISIANA (effective 1/1/2013) and the UNITED STATES OF AMERICA (effective 1/4/2014)** to use any product in the installation or repair of any public water system or any plumbing in a facility or system that provides water for human consumption if the wetted surface area of the product has a weighted average lead content greater than 0.25%. This prohibition does not extend to service saddles used in California, Louisiana or under USA Public Law 111-380.

IMPORTANT NOTICE - READ CAREFULLY

# Handy-Loc ("H" & -3H") Series

## Compression Connectors - General Information

**The simple steps listed below will make your job easier and assure fast, safe, and watertight connections:**

1. Service tubing should always be **snaked** in the ditch.
2. Use a tube cutter to assure a square end. Make sure tube is round. Surface should be clean and free of nicks.
3. Use chamfer tool to bevel lead edge of tubing, **do NOT lubricate tubing or use an insert stiffener** (chamfer tool available through A.Y. McDonald Mfg see chart below).
4. Verify grip ring is oriented as shown in diagram to ensure proper tube installation. The thick end of the grip ring should be facing the o-ring. The nut is factory assembled to the stop face, do Not disassemble or loosen nut.
5. Mark tube from lead edge to ensure proper insertion depth. (See chart below for required depth), stab tube through nut, grip ring, and o-ring until end of nut is even with mark. (Some fittings may not have a stop). Pull on tube to lock in place.
6. **PRESSURE TEST FOR LEAKS BEFORE BACKFILLING.**
7. **USE ONLY ON COLD WATER SERVICES.**
8. A.Y. McDonald is not responsible for damage resulting from improper installation of the Handy-Loc Nut Assembly.

**For use on PE tube only. Do Not use on copper tube.**

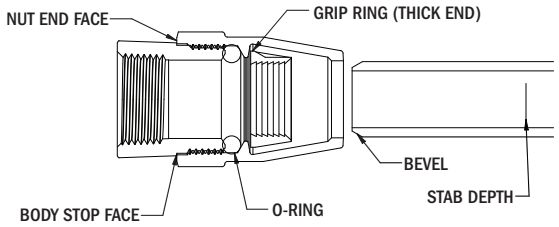


The A.Y. McDonald Series compression system is a simple convenient method of connection for tube size service materials.

(See table below for approved tubing specs.)

**Types of tubing for use with A.Y. McDonald Fittings**

| NOMINAL SIZE | POLYETHYLENE ASTM D2737 SDR 9 TUBE SIZE O.D. | POLYETHYLENE ASTM D2239 SIDR 7 TUBE SIZE O.D. | A.Y. McDonald Chamfer Tools | Tubing Stab Depth |
|---|---|---|---|---|
| 3/4" (H) | .871 / .879 | NA | 4772 3/4" | 2 1/8" |
| 1" (H) | 1.120 / 1.130 | NA | 4772 1" | 2 3/16" |
| 3/4"(-3H) | NA | 1.045 / 1.110 (1.089) | 4773 3/4" | 2 3/16" |
| 1"(-3H) | NA | 1.329 / 1.399 (1.384) | 4773 1" | 2 7/8" |

**()** · Maximum pipe O.D. that will work with A.Y. McDonald fittings.

## Installation Instructions for McGrip ("G" & "-3G") Series Compression Connectors

**The simple steps listed below will make your job easier and assure fast, safe and watertight connections:**

1. Service tubing should always be **snaked** in the ditch.
2. Use a tube or pipe cutter to assure a square end. Make sure pipe is round. On copper tubing, use a rounding tool, if necessary. Surface should be clean and free of nicks.
3. ✳ Insert stiffeners **must** be used with plastic tubing.
4. Stab tube through the nut and into the socket of the valve or fitting until it bottoms out (some fittings may not have a stop).
5. Tighten the McGrip "G" & "-3G" Series nut to the stop. The end face of the nut is to contact the stop face of the body.
6. **PRESSURE TEST FOR LEAKS BEFORE BACKFILLING.**
7. **USE ONLY ON COLD WATER SERVICES.**

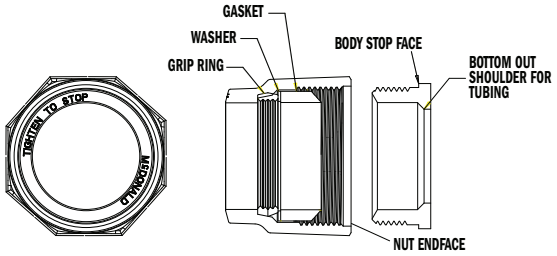


The A.Y. McDonald McGrip "G" & "-3G" Series compression system is a simple convenient method of connection for tube size service materials

(See table below for approved tubing specs.)

**"-3G" Series Fittings Types of Pipe/Tubing for use with A.Y. McDonald Fittings**(Outside Diameters listed)

| NOMINAL SIZE | POLYETHYLENE ASTM D2239 SDR7 PIPE SIZE ✳ |
|---|---|
| 3/4" | 1.045 / 1.110 (1.089) |
| 1" | 1.329 / 1.399 (1.384) |

**()** · Maximum pipe O.D. that will work with A.Y. McDonald fittings.

**"G" Series Fittings Types of Pipe/Tubing for use with A.Y. McDonald Fittings**
(Outside Diameters listed)

| NOMINAL SIZE | 3/4" | 1" | 1 1/4" | 1 1/2" | 2" |
|---|---|---|---|---|---|
| TYPE K or L COPPER TUBE | .872 / .878 | 1.121 / 1.129 | 1.371 / 1.379 | 1.621 / 1.630 | 2.120 / 2.130 |
| POLYETHYLENE ✳ ASTM D2737 SDR 9 TUBE SIZE | .871 / .879 | 1.120 / 1.130 | 1.370 / 1.380 | 1.619 / 1.631 | 2.119 / 2.131 |
| POLYBUTYLENE ASTM D2666 SDR 9 TUBE SIZE CLASS 250 ✳ | .875 / .883 | 1.125 / 1.135 | 1.375 / 1.385 | 1.625 / 1.637 | 2.125 / 2.137 |